SR
LED LIGHTS
www.srledlights.com

SRE-083

LED down Light Series

Ceiling Recessed non Adjustable

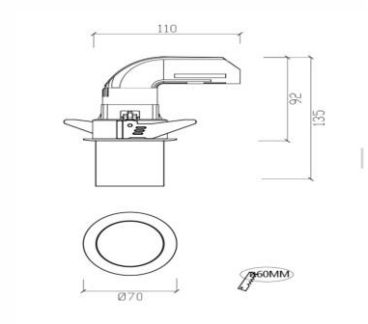

Specifications

Product Reference

Model No
SRE-083
Installation Type
TRIMLESS
Beam Direction
Fixed

Construction & Materials

Housing Material
Aluminium Die Cast
Heatsink
Passive Cooled Aluminium
Finish
White Powder Coated
IP Rating
IP-20

Physical

Diameter
70mm
Cutout Diameter
45mm
Recessed Depth
59mm

Light Technology

Binning
3 step MacAdam
LED Life Time
> 50, 000 Hours
Colour Rendering CRI
CRI80 as standard/ CRI90 on Request

Optics

Secondary Optics
Optical Lens
Beam Direction
Fixed

Electrical System

Input Voltage
220V-240V AC/50Hz
Input Power
9w
Power Factor
>0.95
ATHD
<20%
Driver
Bag (Constant - Current Led Driver)

Controls

Standard
Switchable On/Off
Optional
Phase Cut / Analog / Dali Dimming
CCT Tunable
not available

SR
LED LIGHTS
www.srledlights.com

SRE - 083 9w

LED Fitted
CREE COB LED 36Vdc/200mA

Co-Related Colour Temperature
2700K 3000K 3500K 4000K 5000K 6500K

Delivered Lumens
720

Efficacy (System - lm/watt)
80

Beam Angle
36°

LED Power Watts
7.5

System Power Watts
9

S.R.Industries
GalaNo. 1 & 2, 1st Floor , Geeta Industrial Estate ,
Next to Laghu Udyog , I.B.Patel Road ,
Goregaon (E), Mumbai - 400063.
Email Id : sales@srledlights.com
Tel.No : 022-26860670